UNISEALS
SMARTER INFRASTRUCTURE

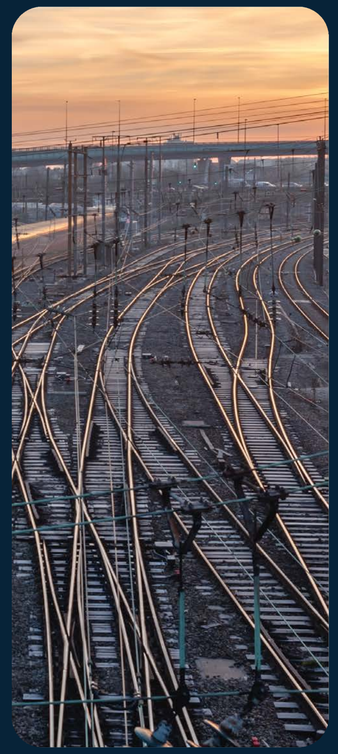









DRIVEN BY INNOVATION.



SCANDINAVIAN ENGINEERING FOR CRITICAL INFRASTRUCTURE.

- **Headquartered in Denmark**, with partners across Scandinavia, Europe, and the UK
- **20+ years of experience in** cable protection and underground infrastructure
- Strong background within **rail, energy, digital and critical infrastructure**



CABLE PROTECTION THAT LASTS.

- Reducing installation time & complexity
- Documented compliance
- Structural integrity
- Long-term performance

PROVEN IN DEMANDING ENVIRONMENTS.









ONE LOGIC.
SEAMLESS SYSTEM.



FUTURA
MODULAR CHAMBER SYSTEM



HYBRID COVERS
ACCESS SOLUTIONS



QUATTRO
CABLE DUCT SYSTEM

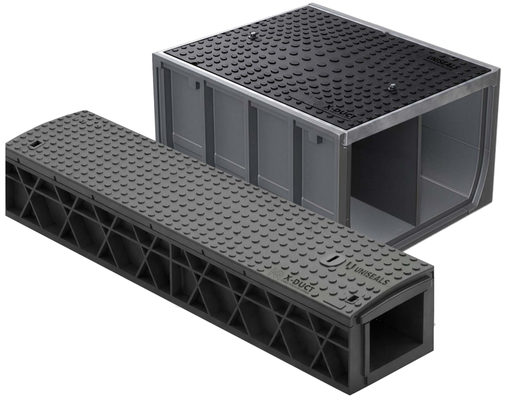

X-DUCT
CABLE THROUGH SYSTEM

Integrated chambers, covers, and cable systems

Modular push-fit design — faster install

Proven load performance, fully documented

IQ SYSTEM INTEGRATION.



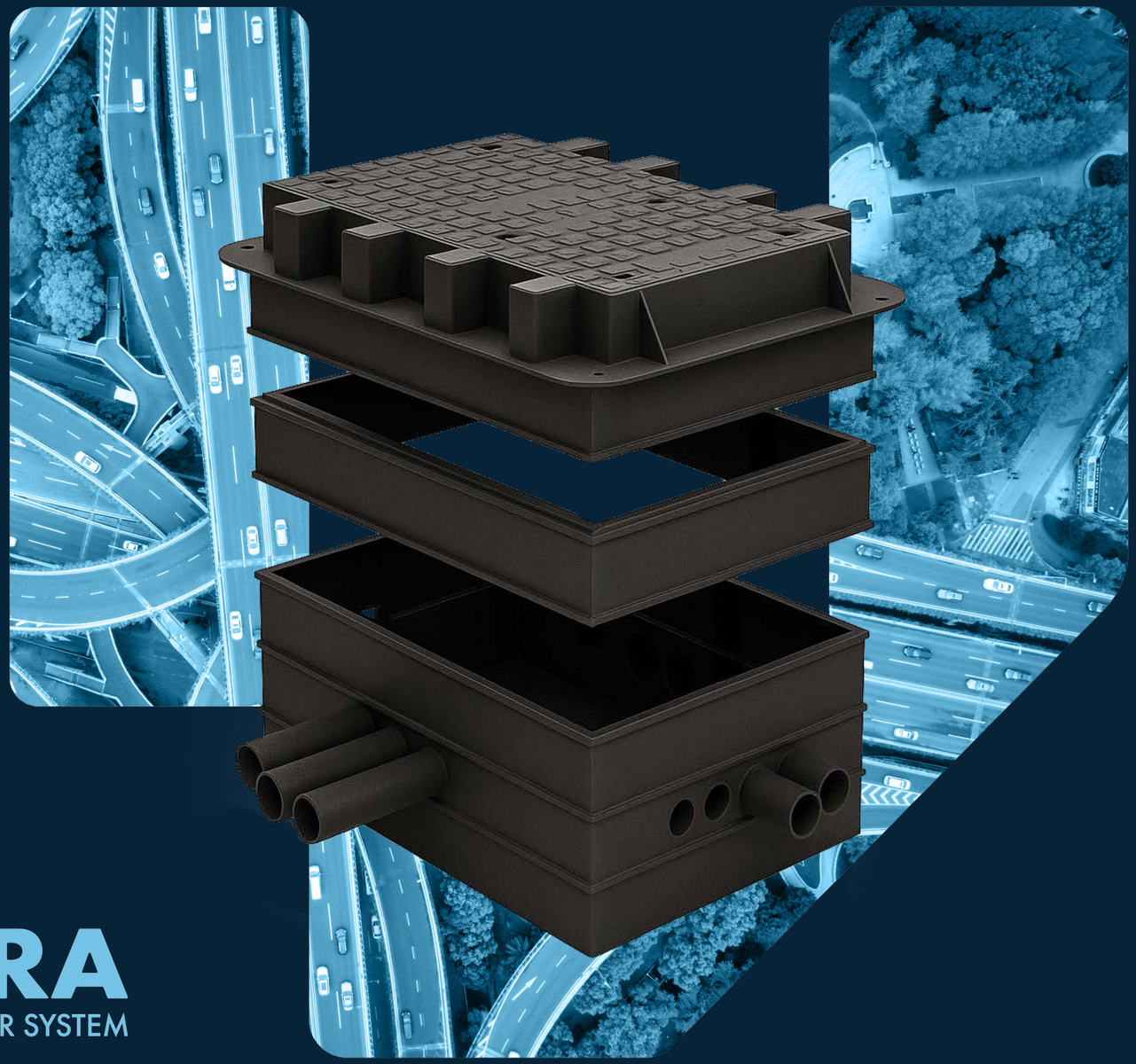

FUTURA

MODULAR CHAMBER SYSTEM

UNDERGROUND ACCESS AND CABLE MANAGEMENT.

FUTURA
MODULAR CHAMBER SYSTEM

IQ Futura is a modular, stackable chamber system. Built section by section to achieve the exact depth and load class required.

- Up to 60% faster installation
- Lightweight design: no heavy lifting required
- Customizable, DGNB – compatible materials



ADAPTABLE STRENGTH.

FUTURA
MODULAR CHAMBER SYSTEM

VERTICAL STRENGTH
Tested up to 90 tonnes incl.
composite cover

SIZE RANGES
From 300 x 300 up to 3000 x 3000 mm

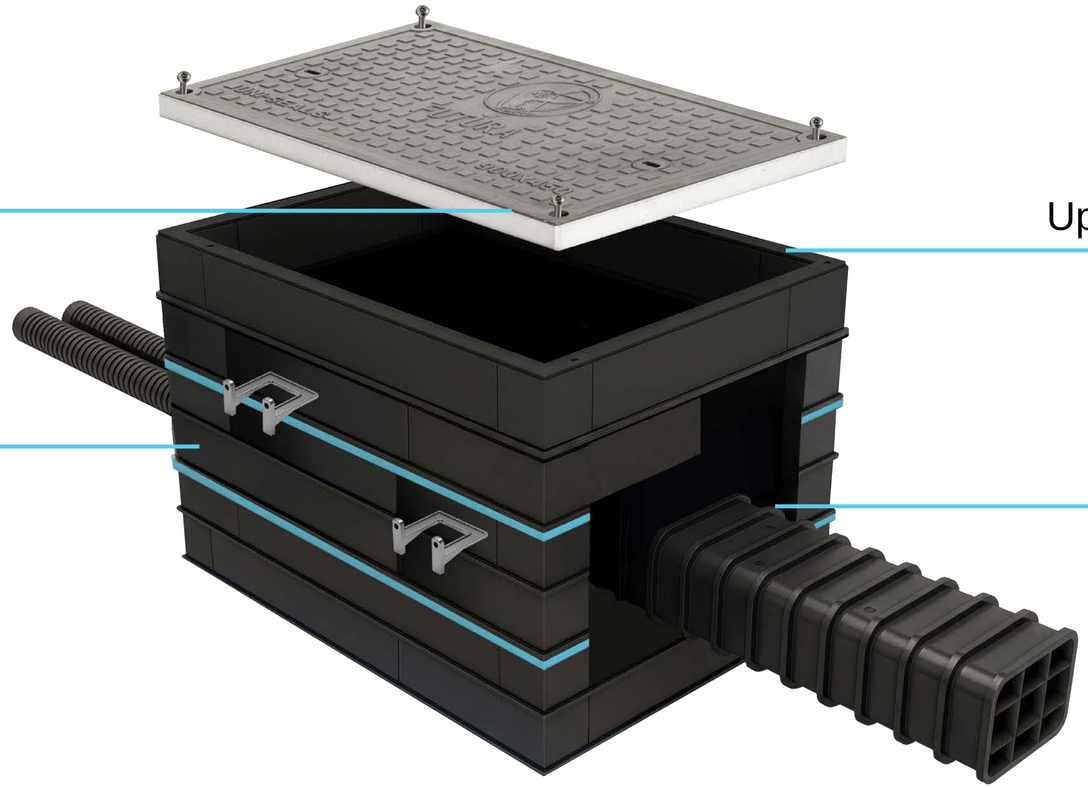

LIGHTWEIGHT GRP
Up to 60% faster installation

POWER FRAME
IQ Futura fitting for
Extra chamber strength

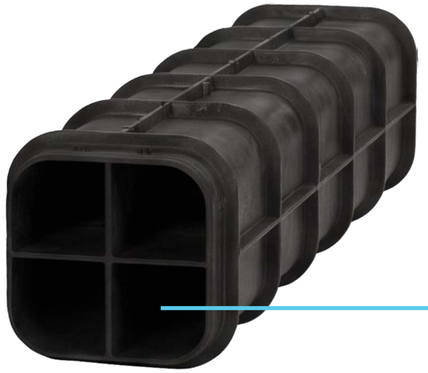

IQ QUATTRO
4-way, 4-way XL, 6-way or 9-way



IQ HYBRID COVER
It can come in either composite or ductile iron versions

DIMENSIONS.

FUTURA
MODULAR CHAMBER SYSTEM

Standard sizes shown. Custom dimensions available.

Chamber type	Internal dimensions (mm)	External dimensions (mm)	Height per Section (mm)	Load capacity
450 x 450	450 x 450	570 x 570	150	40T
600 x 450	600 x 450	720 x 570	150	40T
600 x 600	600 x 600	720 x 720	150	40T
750 x 600	750 x 600	870 x 720	150	40T
750 x 750	750 x 750	870 x 870	150	40T
900 x 600	900 x 600	1020 x 720	150	40T
900 x 900	900 x 900	1020 x 1020	150	40T
900 x450	900 x450	1020 x 570	150	40T
1200 x 600	1200 x 600	1320 x 720	150	40T
1200 x 1200	1200 x 1200	1320 x 1320	150	40T
1200 x 900	1200 x 900	1320 x 1020	150	40T
1500 x 1500	1500 x 1500	1620 x 1620	150	40T
1800 x 1800	1800 x 1800	1920 x 1920	150	40T

APPLICATIONS AND USE AREAS.

FUTURA
MODULAR CHAMBER SYSTEM

- Energy Infrastructure
- Digital Infrastructure
- Critical Infrastructure
- Rail Infrastructure

Built for environments where performance is non-negotiable:

- **Novo Nordisk**
- **Meta Data Centres**
- **Femern**
- **Danish Defence industry**



ENGINEERED. TESTED.
FOR CRITICAL INFRASTRUCTURE.

FUTURA
MODULAR CHAMBER SYSTEM

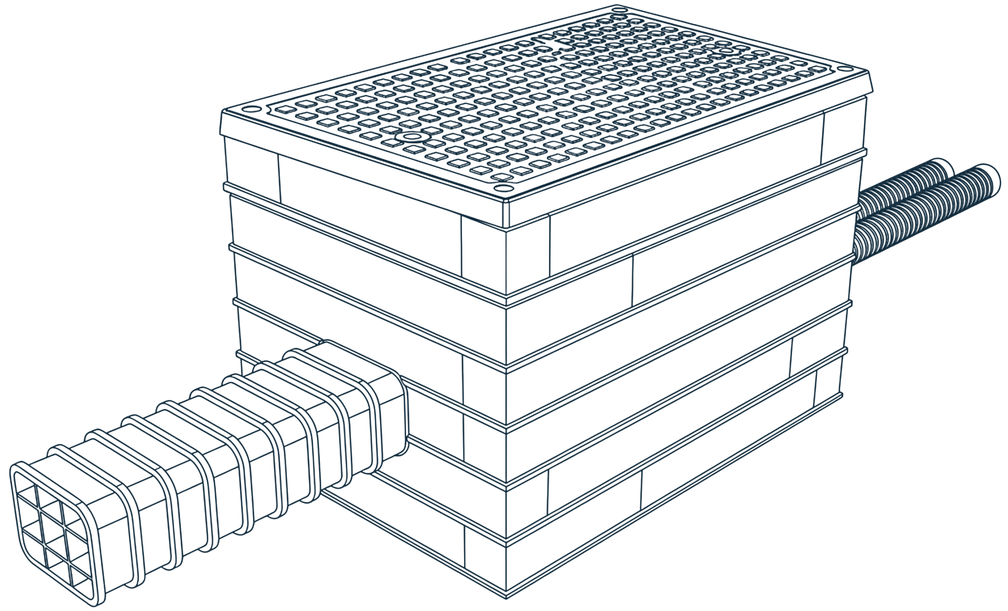

Independently tested (DTI)	**EN 124 certified**	**Engineered and verified** by COWI	Designed to **Eurocode & rail standards**



HYBRID COVERS
ACCESS SOLUTIONS

SECURE ACCESS FOR CRITICAL INFRASTRUCTURE.

HYBRID COVERS
ACCESS SOLUTIONS

IQ Hybrid Cover provides reliable access to underground infrastructure:

- Available in standard and custom sizes
- EN 124 / EN 1627 RC classification
- Hybrid construction: ductile iron, composite, and steel
- Fully compatible with IQ Futura Modular Chamber System



EXTRA SECURITY.

HYBRID COVERS
ACCESS SOLUTIONS

IQ Hybrid Security Cover is engineered for cable inspection chambers with particularly high requirements for access control and security:

- features a double-cover,
- dual locking mechanism,
- documented to be resistant to unauthorized access.

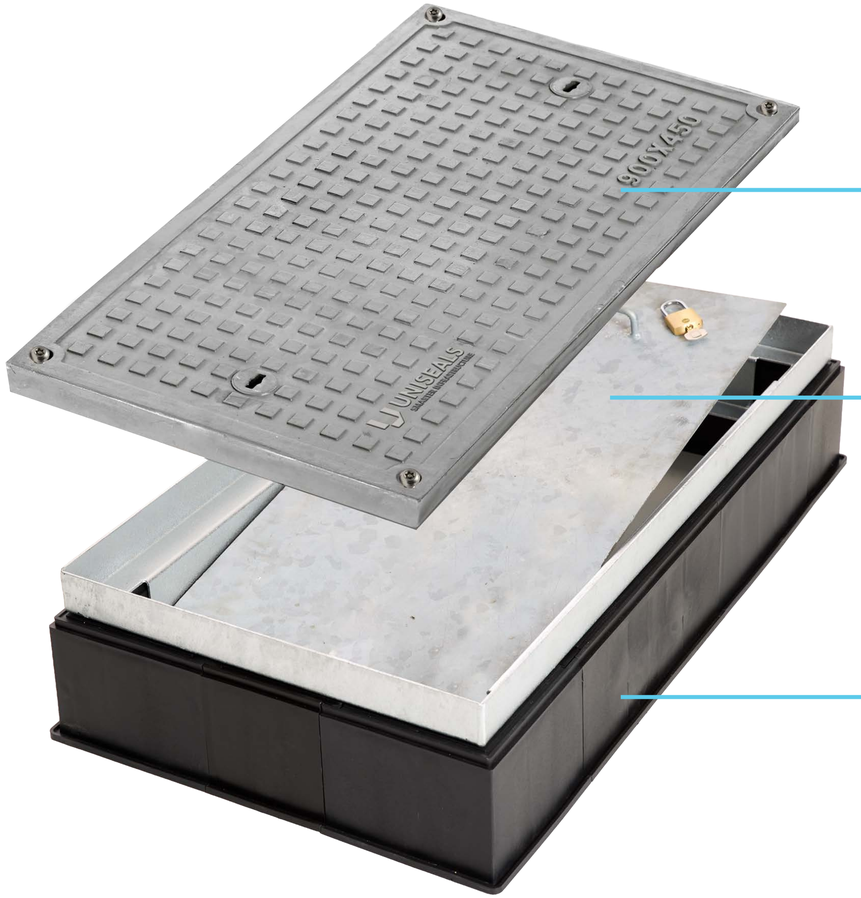

COVER

SECURITY COVER

IQ FUTURA SECTION

STANDARD SIZES.

HYBRID COVERS
ACCESS SOLUTIONS

Widths	Available Lengths (mm)
600	450, 600
900	450, 600, 900
1200	600, 1200

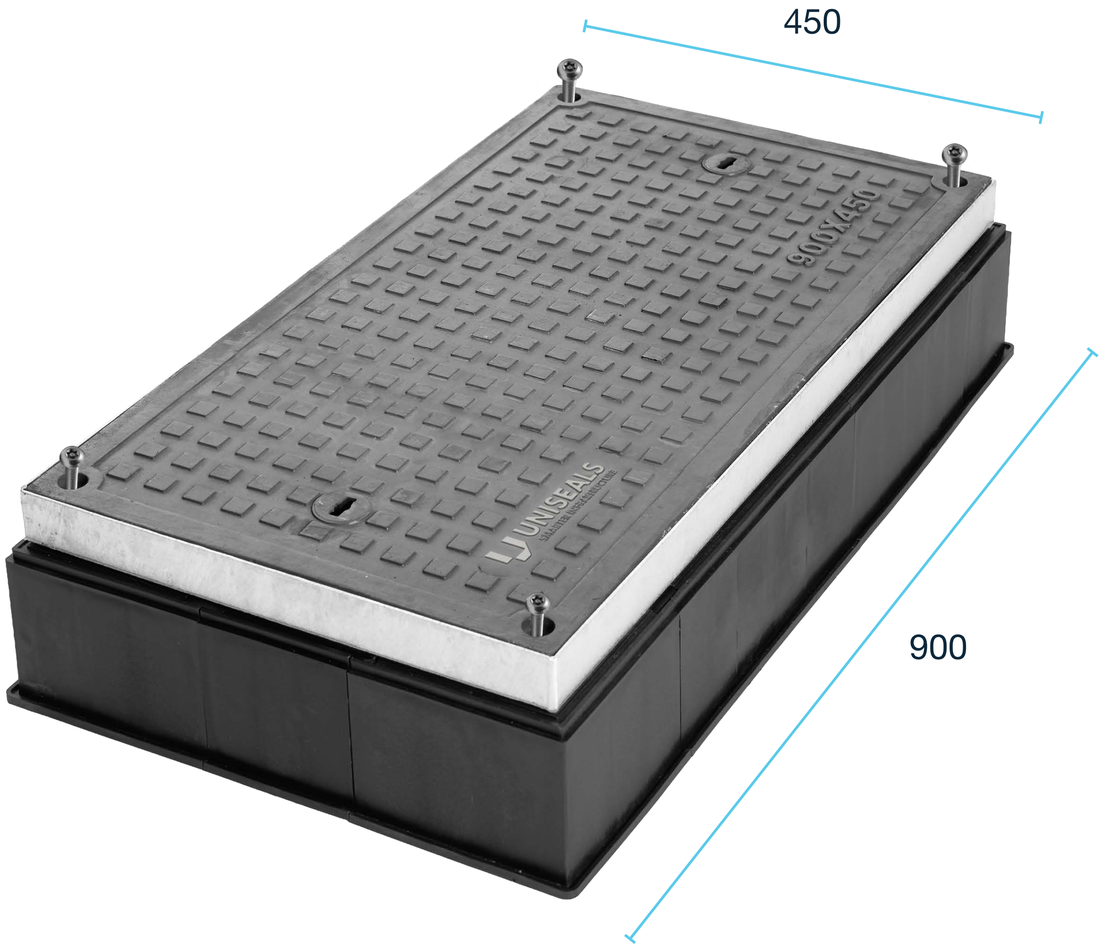

APPLICATIONS AND USE AREAS.

HYBRID COVERS
ACCESS SOLUTIONS

- Digital Infrastructure
- Critical Infrastructure
- Rail Infrastructure

Protecting access to what matters most: harsh environments, critical infrastructure, data centres, transport hubs, and secure sites.



ENGINEERED. SECURE.
FOR ACCESS AND PROTECTION.

HYBRID COVERS
ACCESS SOLUTIONS

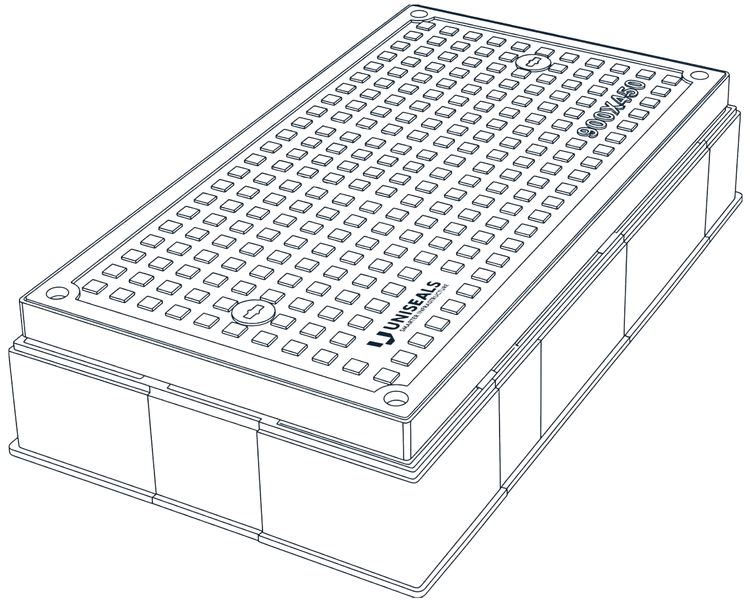

EN 124 load classes (A15 – F900)	Covers all **traffic and load requirements**	**Security options** (EN 1627 RC)	**High durability** in aggressive environments

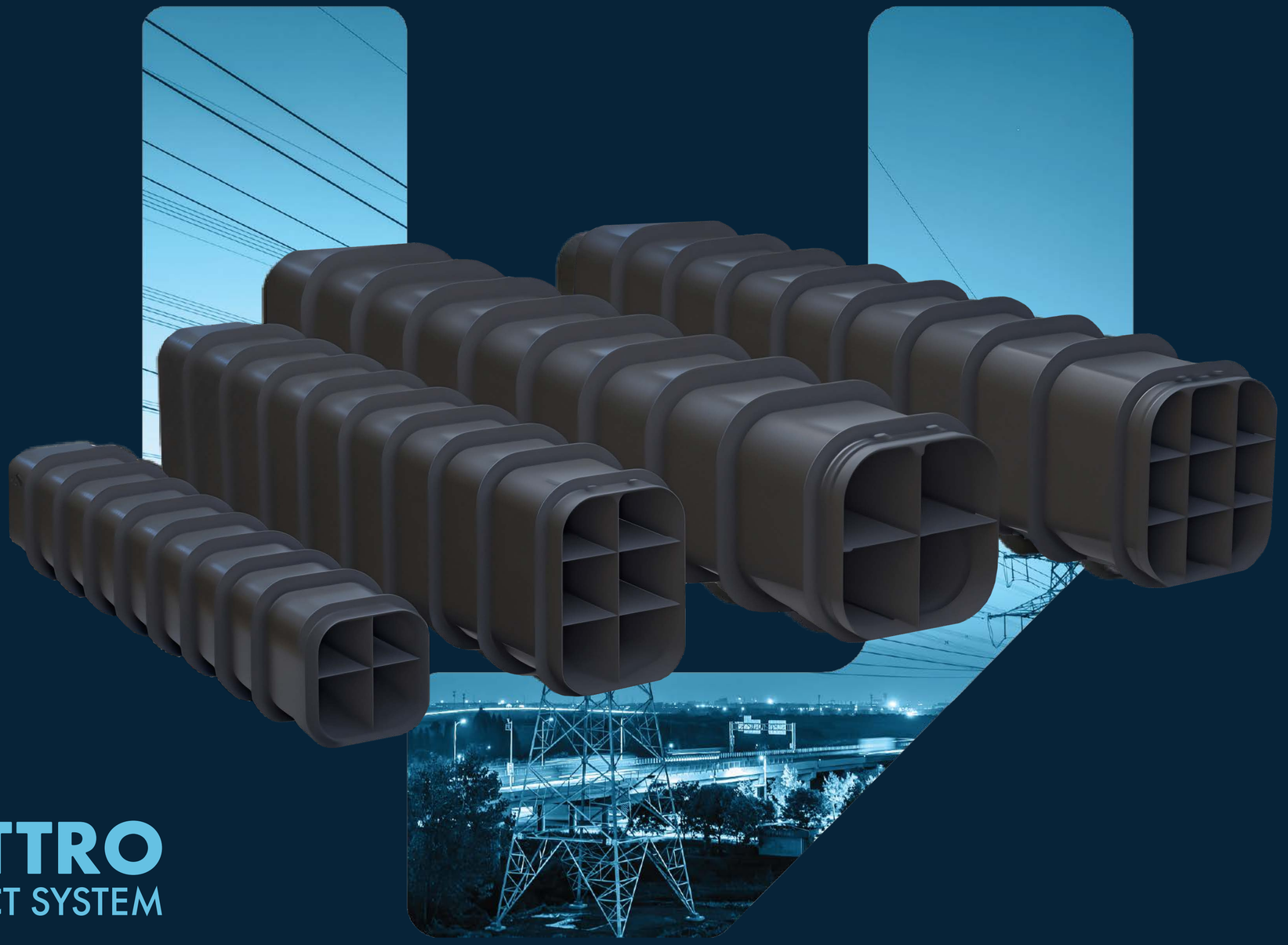

QUATTRO
CABLE DUCT SYSTEM

SPACE-SAVING CABLE PROTECTION.

QUATTRO
CABLE DUCT SYSTEM

IQ Quattro is a high-strength HDPE duct system engineered for multi-cable configurations and demanding environments.

- Corrosion-free durability
- Up to 50% faster installation
- 4-, 4XL-, 6- and 9-way configurations
- Push-fit assembly for quick connections



COMPLETE PROTECTION.

QUATTRO
CABLE DUCT SYSTEM

IQ Quattro ducts provide a versatile cable protection system for underground environments with multiple duct entry options.



VIBRATION RESISTANT

IMPACT RESISTANT

DIMENSIONS.

QUATTRO
CABLE DUCT SYSTEM

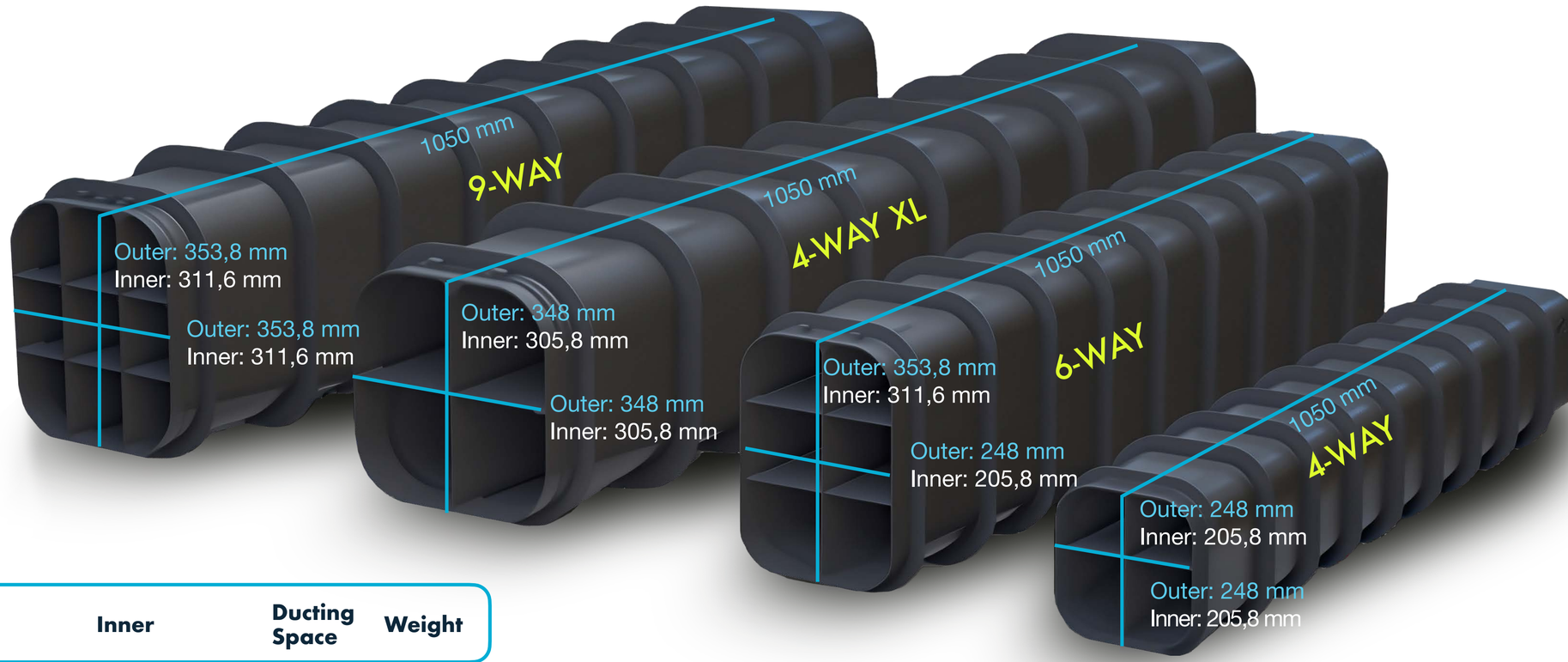

Article no.	Product reference	Overall length	Outer	Inner	Ducting Space	Weight
202020 100	4-Way	1050 mm	248 x 248 mm	205,8 x 205,8 mm	100	7.3 kg
202020 101	4-Way XL	1050 mm	348 x 348 mm	305,8 x 305,8 mm	150	16.5 kg
202020 102	6-Way	1050 mm	353,8 x 248 mm	311,6 x 205,8 mm	100	11 kg
202020 103	9-Way	1050 mm	353,8 x 353,8 mm	311,6 x 311,6 mm	100	17.7 kg

APPLICATIONS AND USE AREAS.

QUATTRO
CABLE DUCT SYSTEM

- Energy Infrastructure
- Digital Infrastructure
- Rail Infrastructure

Engineered for Europe’s most demanding infrastructure, rail, telecom, and large-scale infrastructure across Europe:

- **Copenhagen Light Rail**
- **HS2**
- **Rail Baltic**
- **St. Andrews**



TESTED. FLEXIBLE.
FOR UNDERGROUND PERFORMANCE.

QUATTRO
CABLE DUCT SYSTEM

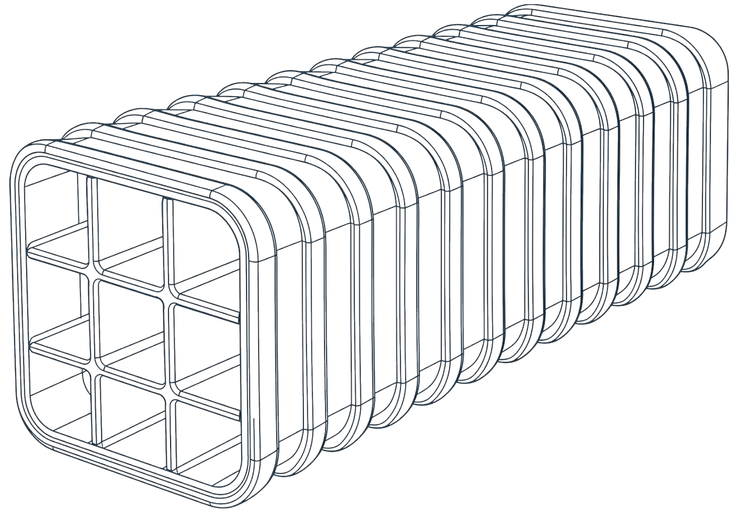

Independently tested (DTI & accredited lab)	Verified strength **up to 86 kN**	**ISO 9001** production standard

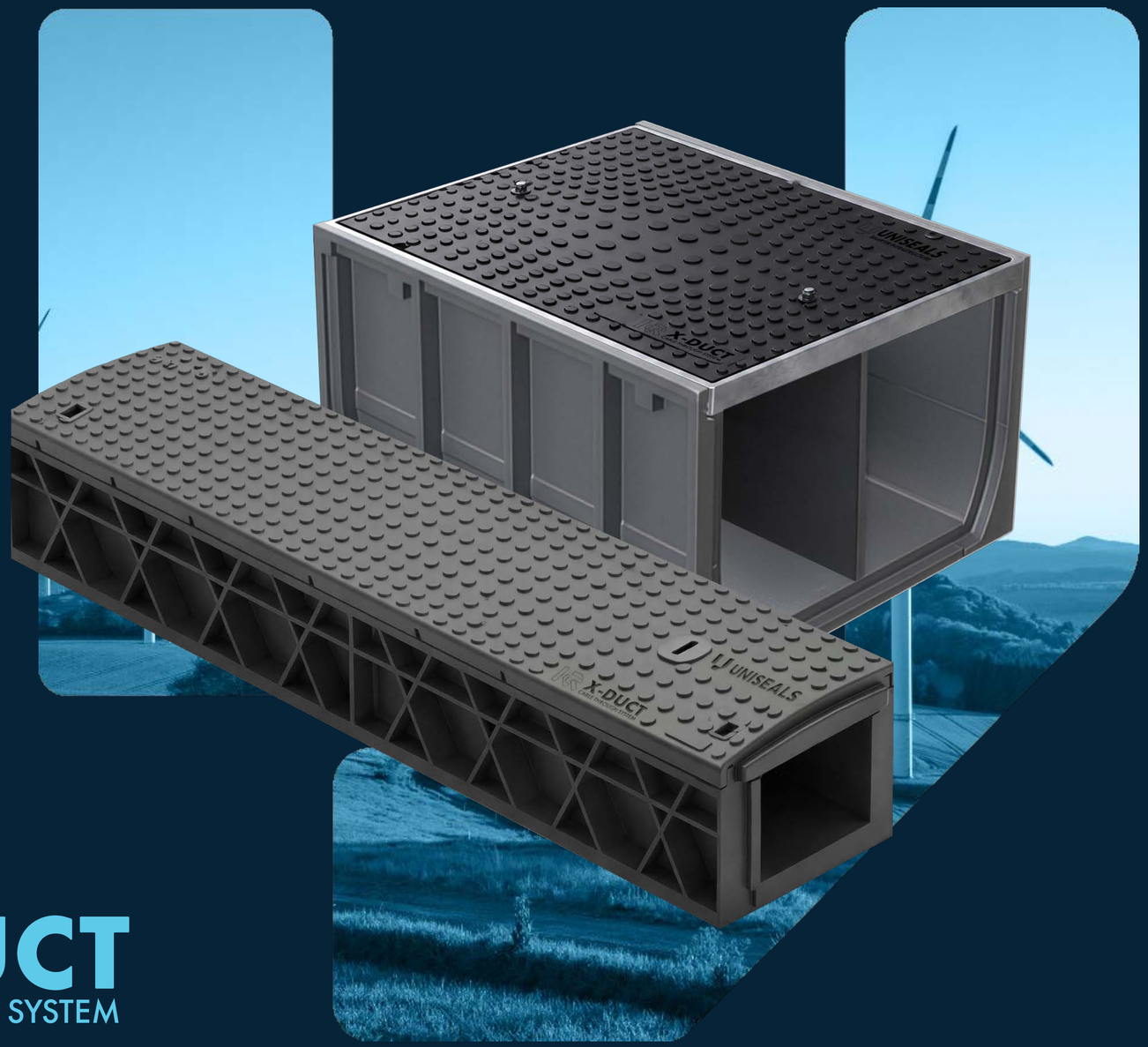

X-DUCT

CABLE THROUGH SYSTEM

SMARTER PROTECTION. FOR VALUABLE INFRASTRUCTURE.

IQ X-DUCT
CABLE THROUGH SYSTEM

IQ X-Duct is a modular cable routing system in GRP composite designed as a lightweight alternative for demanding infrastructure projects.

Lightweight
Easier handling, transport, and installation

High strength
Engineered for demanding infrastructure environments

Flexible
Modular system configurable to different layouts and capacities

Manual installation
No heavy equipment needed



A COMPLETE SYSTEM.

X-DUCT
CABLE THROUGH SYSTEM



240 mm incl. cover



Horizontal divider



Vertical divider



A 15



B 125



D 400

The system includes dividers, sliders, covers, and project specific components.

DIMENSIONS.

X-DUCT
CABLE THROUGH SYSTEM

Model	Weight	Ext. width	Ext. height	Length	Load class
X-Duct 240	13 kg	365/350 mm	205 mm	1,033 mm	A15
X-Duct 350	54 kg	530 mm	600 mm	1,000 mm	A15/B125/D400
X-Duct 600	63 kg	780 mm	600 mm	1,000 mm	A15/B125/D400
X-Duct 800	71 kg	980 mm	600 mm	1,000 mm	A15/B125/D400
X-Duct 1000	77 kg	1,080 mm	600 mm	1,000 mm	A15/B125/D400

Internal height 470 mm on all X-Duct 350–1000. X-Duct 800 and 1000 are made-to-order; drawings available on request.



X-Duct 240

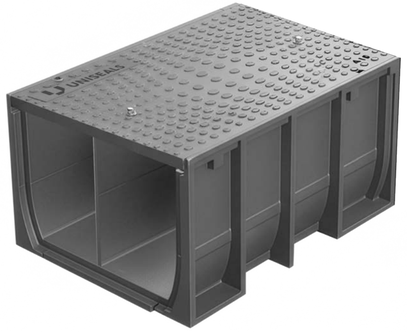

X-Duct 350-1000

Lockable design for increased security.

Available in large sizes for demanding industrial projects.

APPLICATIONS AND USE AREAS.

X-DUCT
CABLE THROUGH SYSTEM

- Digital Infrastructure
- Rail Infrastructure

Redefining heavy-duty cable infrastructure for power stations, data centres, rail, and energy transmission, industrial and high-load installations.





TESTED. LOAD-BEARING. ALTERNATIVE FOR CONCRETE.

X-DUCT
CABLE THROUGH SYSTEM

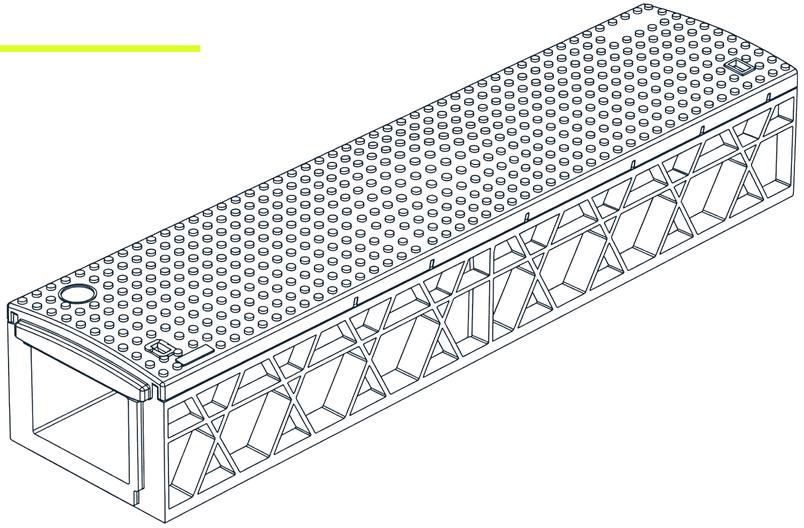

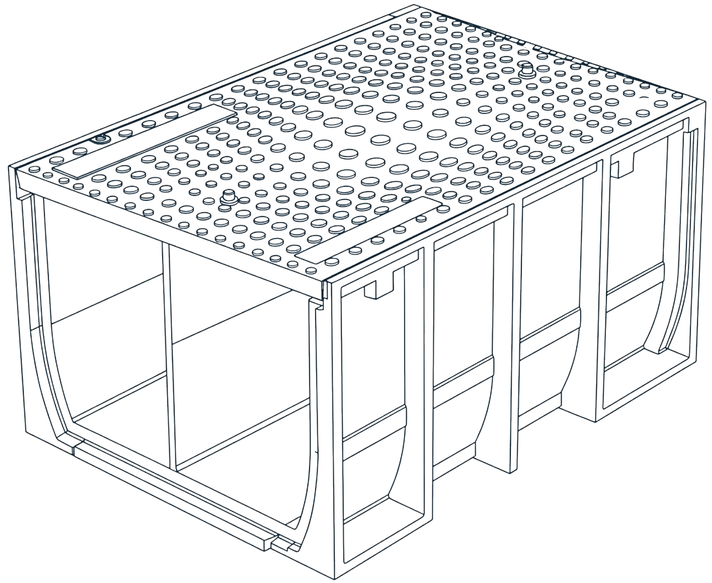

En 1433 Channel tested to D400	**EN 124** Covers tested A15-D400	**DIN 53438-2** K1 fire performance	**DIN 53438-3** F1 fire performance

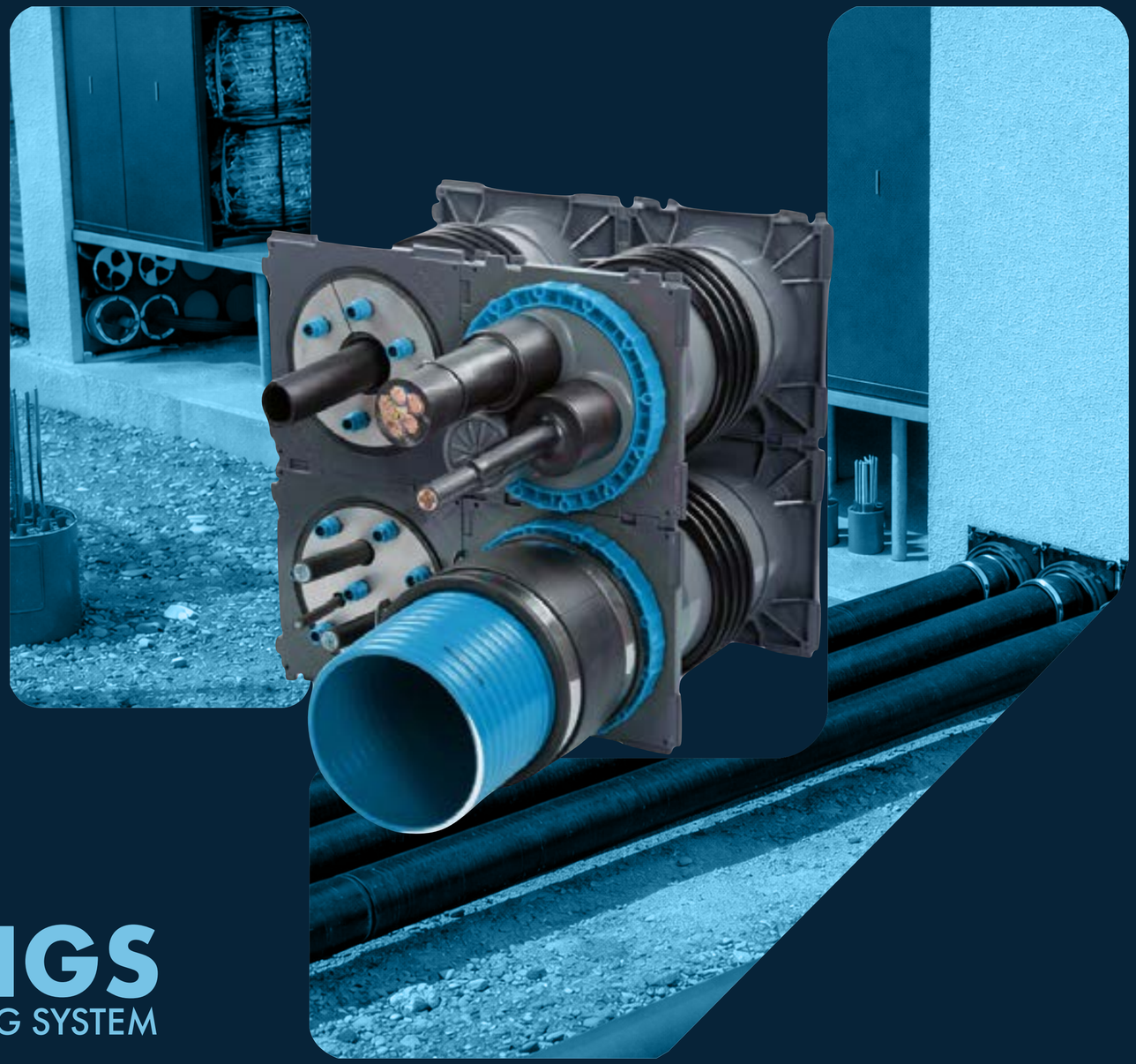

FITTINGS

TRANSIT SEALING SYSTEM

TIGHT INSTALLATION AND SEALING FOR DATA CENTRES.

FITTINGS
TRANSIT SEALING SYSTEM

Water pressure tight installation parts for concrete engineering, sealing solutions for cables, and pipes.

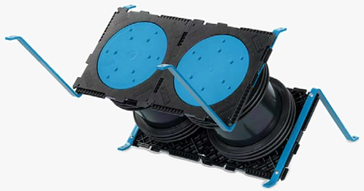

Cable Penetration KDS 150 double wall penetration – 45 degrees



Cable Inlet Box System KDS 1



Flexible Empty Pipe System



Cable Penetration KDS 150 FL/ZA



Protrusion Flange FDS 150

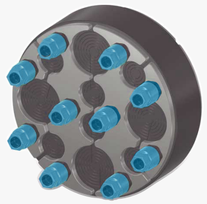

Sealing Insert Universal Multiple – split



System Cover KDS 150 – heat-shrink technology



Swan Neck



Cable Penetration KDS

APPLICATIONS AND USE AREAS.

FITTINGS
TRANSIT SEALING SYSTEM

Digital Infrastructure



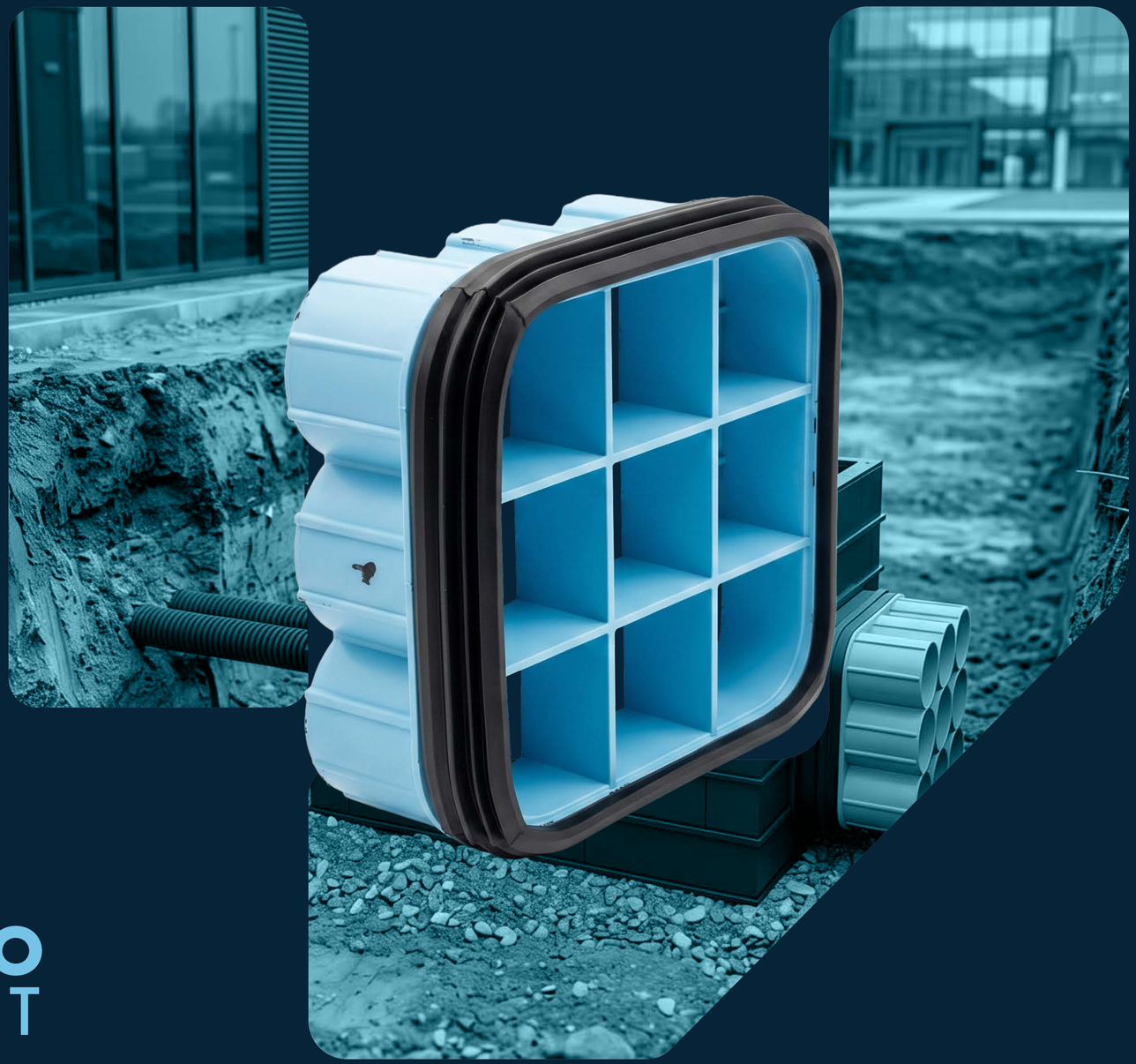

QUATTRO PUSH-FIT

PUSH-FIT SEALING
FOR THE IQ RANGE.

QUATTRO
PUSH-FIT

Connect IQ Quattro ducts with IQ Futura Chambers with a convenient push-fit sealing system.



Push-fit



Quattro



Futura

APPLICATIONS AND USE AREAS.

QUATTRO PUSH-FIT

- Energy Infrastructure
- Digital Infrastructure
- Rail Infrastructure



"OUR SOLUTIONS ARE BUILT ON 20+ YEARS OF EXPERIENCE, DANISH QUALITY, AND CLOSE COLLABORATION WITH THE MARKET."



Jeppe Dalsgaard Nielsen
Owner and Managing Director

UNISEALS
SMARTER INFRASTRUCTURE

CONTACT INFO.

HEAD OFFICE

Skærskovgårdsvej 13, 8600
Silkeborg, Denmark
Tel: +45 70 22 70 18
Email: jn@uni-seals.dk

UNISEALS

BUILT FOR THE PRESENT.
ENGINEERED FOR THE FUTURE.

www.unisealsiq.com